CITRAWEB SOLUSI TEKNOLOGI
www.citraweb.com
info@citraweb.com
sales@citraweb.com

MikroBits Ainos 2071 (RoS Level 5)

Kode : MBITS2071-L5
Brand : Discontinued
Jenis : Discontinued
Harga : Rp 10.415.000,00



--Discontinued-- Router ini berbasis processor Intel Multi Core dengan 1U rackmount. Memiliki 7 buah port gigabit yang terkoneksi langsung ke mainboard, memberikan kecepatan tinggi pada tiap portnya. Sudah termasuk MikroTik RouterOS level 5.

Spesifikasi

- **CPU :** Multi Core x86-64 64 Bit, Intel Core2Duo E7500 2.93 GHz Processor
- **Memory :** 2 x 667MHz DDR2 Slots, 2 x 1024MB Industrial Grade RAM (2GB RAM) installed on the base Model
- **Boot loader :** Phoenix BIOS
- **Data storage :** 2x SATA, 1x CF Slots with True IDE IBM MicroDrive Support
- **Compact Flash :** 1 GB Industrial Grade Compact Flash for RouterOS
- **HDD :** 250GB SATA 2.5" HDD
- **Ethernet :** 7 x 10/100/1000 Mbit/s Intel Pro 1000 Gigabit Ethernet ports supporting Auto-MDI/X through PCI-E single Lanes
- **PCI Slots :** 1x PCI Slot, 1x Mini PCI 32 Bit Slot
- **Serial port :** 2x DB9 RS232C asynchronous serial ports
- **LEDs / LCDs :** 1x back lit 2character x16 character LCD Display, Power and HDD LED
- **Speaker :** Mini PC - Speaker
- **Power :** IEC C13 Power Cord, input power: 100VAC-250VAC 50Hz- 60Hz (International PSU)
- **Fan :** 3x Redundant CPU/Power Supply /Chassis Fans,
- **Dimensions :** 31cm x 45 cm x 4.4 cm
- **Temperature :** Operational: 0Â°C to 45Â°C
- **Humidity :** Operational: up to 95% relative humidity (non-condensing)
- **Power Supply :** 270W ATX PSU
- **Operating System :** MikroTik Router OS

www.citraweb.com



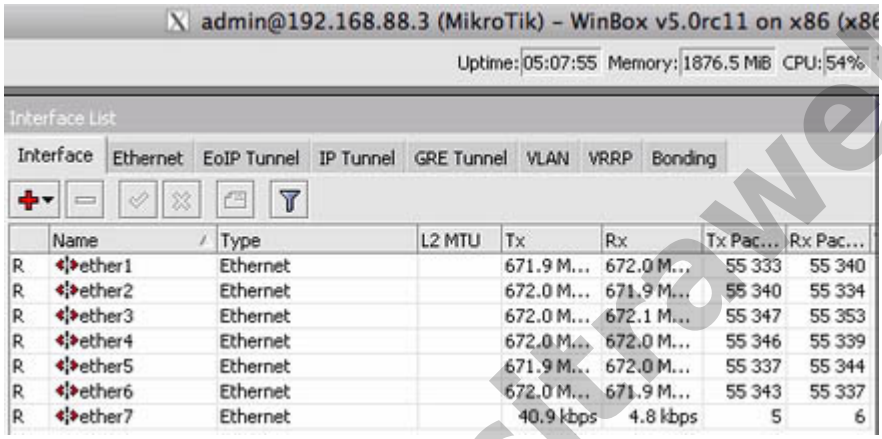

www.citraweb.com

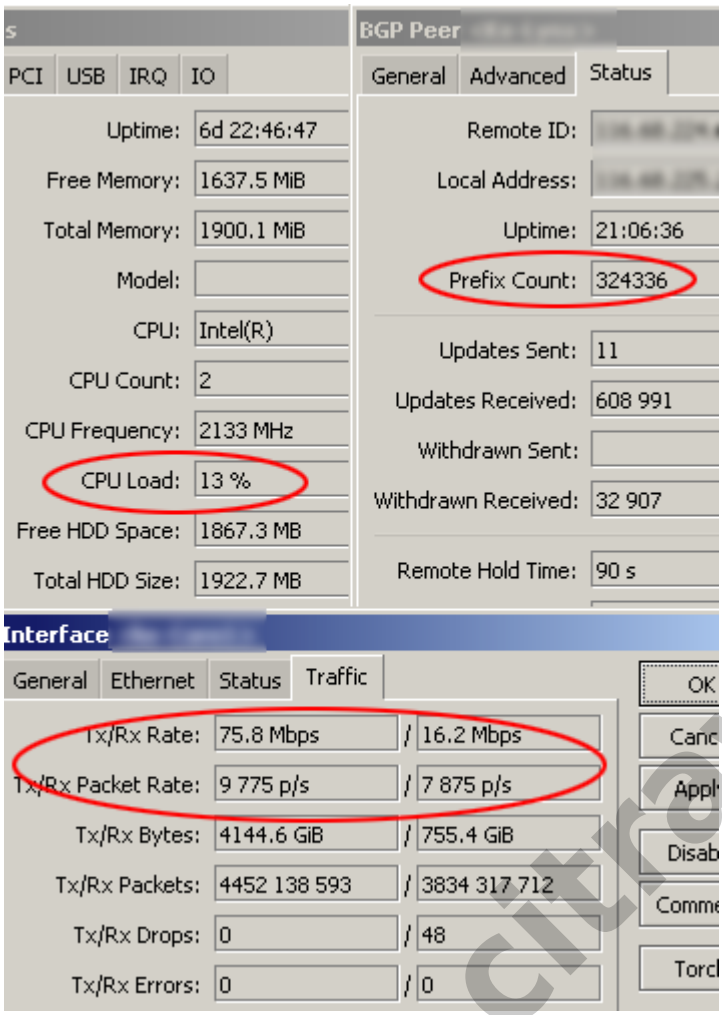

Screen capture pada kondisi real, mampu melewatkan lebih dari 9 ribu pps dan menerima full route BGP (300K prefix) dengan CPU load 15%

Test Type	Aggregate Result
TCP Routed	3.9 Gb/sec
Contrack On	1.000K Packet/sec

Bypass Function - Aktif secara otomatis jika terjadi fail terhadap system (OS fail / Power fail).

www.citraweb.com

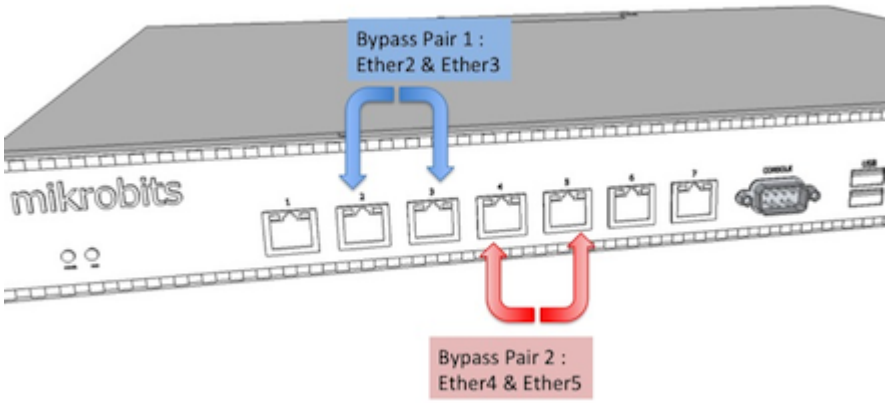

** Harga, spesifikasi, dan ketersediaan bisa berubah dan tidak mengikat*

URL : https://www.citraweb.com/produk/249/

Informasi lebih lanjut, pemesanan dan pembelian, hubungi: 0274-554444 atau email sales@citraweb.com

www.citraweb.com