CITRAWEB SOLUSI TEKNOLOGI
www.citraweb.com
info@citraweb.com
sales@citraweb.com

StarterHorn 30 USMA RF ELEMENTS



Kode : STH-30-USMA
Brand : RF elements
Jenis : Wireless Antenna
Harga : Rp 880.000,00
~~Rp 1.490.000,00~~

StarterHornTM 30° USMA - An affordable horn sector antenna with excellent noise rejection and coverage stability. STH-30-USMA is a scalar horn antenna with a symmetrical radiation pattern and RP-SMA interface for easy connectivity. The StarterHornTM 30 USMA is a convenient start for customers new to horn antenna technology requesting low initial investment.

Penawaran Harga Spesial
08112039555

StarterHornTM Sector Antenna



Premium Beam Performance
The StarterHornTM 30 USMA has unique radiation pattern. The main beam is symmetrical, with circular cross-section - the azimuth and elevation beam widths are both 30° at -6dB.

Excellent Noise Immunity
Noise in unlicensed 5 GHz wireless networks is caused by the side lobes of widely used traditional patch array antennas. The StarterHornTM 30 USMA has zero side lobes, ensuring efficient use of the spectrum. As a result, your wireless network does not suffer from high interference.

www.citraweb.com

High Beam Efficiency
Beam Efficiency (BE) is a side lobes measure with values from 0 to 100%. The higher the BE, the less side lobes an antenna has - StarterHornTM 30° USMA has BE of 92 %, suppressing vast majority of interference and providing game changing throughput increase. For reference, BE of widely used patch array sector antennas rarely exceeds 58%!

Frequency Independent Beam Width and Gain
The shape of the main lobe and the gain of StarterHornTM 30 USMA do not change with frequency. Antenna performance is super stable over a wide span of frequencies between U-NII-1 and U-NII-3 bands. This is extremely important for WISPs planning their network deployments, as they can rely on antenna performance whenever changing a channel.

Powerful Co-Location Ability
StarterHornTM 30 USMA delivers excellent performance in dense co-location deployments. You can split poorly performing 90° sector into three 30° sectors with excellent performance using StarterHornTM 30 sector antennas and offer higher throughput packages or connect more customers.

www.citraweb.com

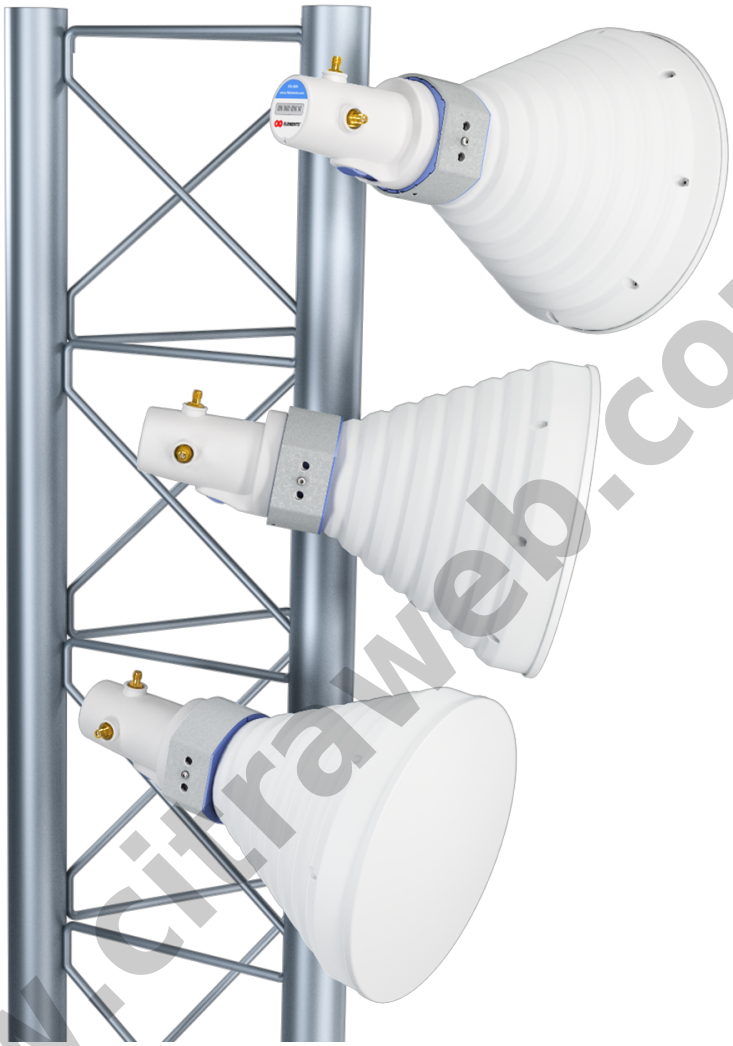

www.citraweb.com

Flexible Connectivity
The StarterHornTM 30 USMA offers a wide range of radio connectivity options. The RP-SMA ports are suitable for any radio with coaxial output. Additional waveguide port enables connectivity to IsoStation and PrismStation - waveguide radios from Ubiquiti Networks.

Compact and Durable
The StarterHornTM 30 USMA is built using premium materials, yet priced reasonably. Antenna is built from aluminium and therefore very light. Mount is simple and functional, with M6 nuts made of surface coated stainless steel to prevent seizing.

CITRAWEB SOLUSI TEKNOLOGI
www.citraweb.com
info@citraweb.com
sales@citraweb.com

Antenna Connection	RP-SMA Port, Waveguide Port
Antenna Type	Symmetrical Horn
Materials	UV Resistant ABS Plastic, Polyethylene,
	Aluminium, Stainless Steel
Enviromental	IP55
Flame Rating	UL 94 HB
Pole Mounting Diameter	20-55 mm (recommend as close to 55 mm as possible)
Temperature	-30°C to +55°C (-22°F to +131°F)
Wind Survival	160 km/h
Wind Loading	23 N at 160km/hour
Mechanical Tilt	± 30°
Weight	1.3 kg / 2.8 lbs – single unit
	1.9 kg / 4.1 lbs – single unit incl. package
	20.9 kg / 46 lbs – carton (10 units)
Single Unit	Retail Box: 269 × 240 × 240 mm / 10.5 x 9.4 x 9.4 inch
Frequency Range	5150 - 5950 MHz
Gain	18 dBi
Azimuth Beam Width -3 dB	H 20° / V 20°
Elevation Beam Width -3 dB	H 20° / V 20°
Azimuth Beam Width -6 dB	H 30° / V 30°
Elevation Beam Width -6 dB	H 30° / V 30°
Beam Efficiency*	92.00%
Front-to-Back Ratio	33db
COMPATIBLE WIRELESS PLATFORMS	
Ubiquiti Networks®	PrismStation™ 5AC, IsoStation™ 5AC, IsoStation™ M5
Other	Any radio with coaxial output

www.citraweb.com

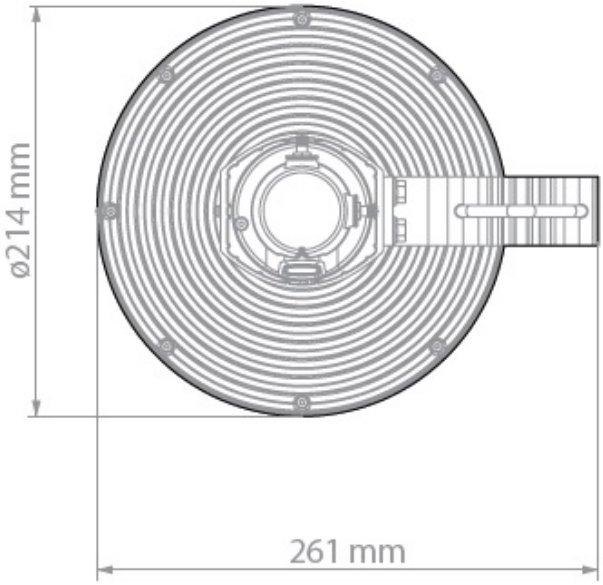

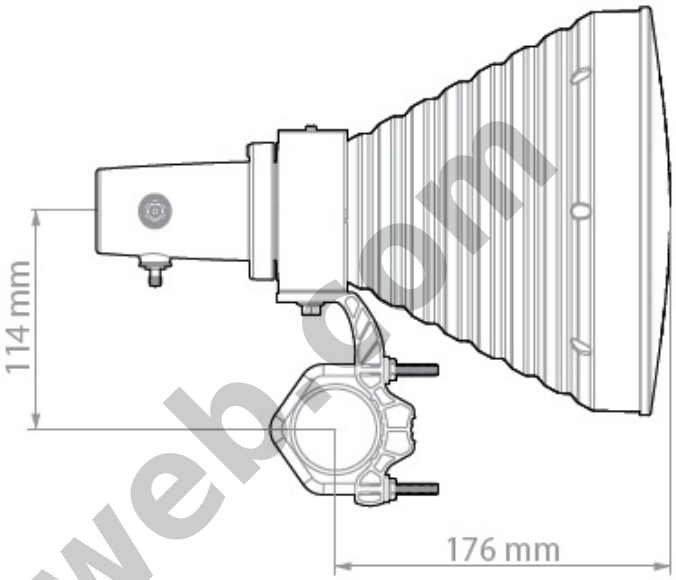

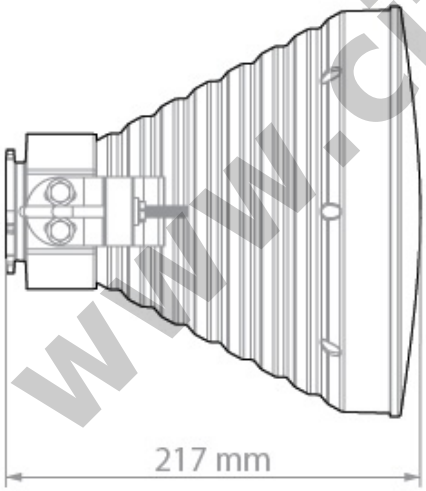

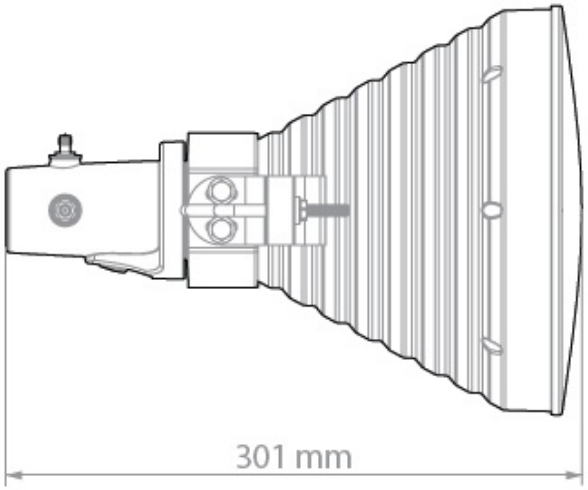

www.citraweb.com

Download Datasheet

Download UserGuide

Coverage Calculator

* *Harga, spesifikasi, dan ketersediaan bisa berubah dan tidak mengikat*

URL : https://www.citraweb.com/produk/880/

Informasi lebih lanjut, pemesanan dan pembelian, hubungi: 0274-554444 atau email sales@citraweb.com

www.citraweb.com