TwistPort Adaptor with SMA Connectors RF ELEMENTS



Kode : TPA-SMA
Brand : RF elements
Jenis : Wireless Antenna
Harga : Rp 390.000,00
~~Rp 650.000,00~~

Allows connection of any SMA-based radio to any TwistPort™ antenna. TPA-SMA provides industry most used RP-SMA female coaxial interface in dual linear H+V polarization. RP-SMA connectors are placed directly on waveguide, avoiding use of inner coaxial cables and minimizing loss to necessary minimum.

Penawaran Harga Spesial
08112039555

What is TPA-SMA

TwistPort Adaptor (TPA) adapts 3rd party radios to RF elements® proprietary TwistPortTM waveguide connector. We typically provide custom made TPA for specific 3rd party radios, following their shape and connector setup. Custom designed TPA allows for the best RF performance, minimal RF loss and excellent user experience.

Not all radios are able to fit custom designed TPA. They might be too bulky, too heavy or simply we do not know about them. For these radios we created TPA that provides RP-SMA female connector interface.

www.citraweb.com

CITRAWEB SOLUSI TEKNOLOGI
www.citraweb.com
info@citraweb.com
sales@citraweb.com

www.citraweb.com

CITRAWEB SOLUSI TEKNOLOGI
www.citraweb.com
info@citraweb.com
sales@citraweb.com

www.citraweb.com

RP-SMA Coaxial Interface

TPA-SMA provides industry most used RP-SMA female coaxial interface in dual linear H+V polarization.



Performance

TPA-SMA covers an ultra-wide band spectrum of 5180-6400 MHz and performs with superb efficiency.

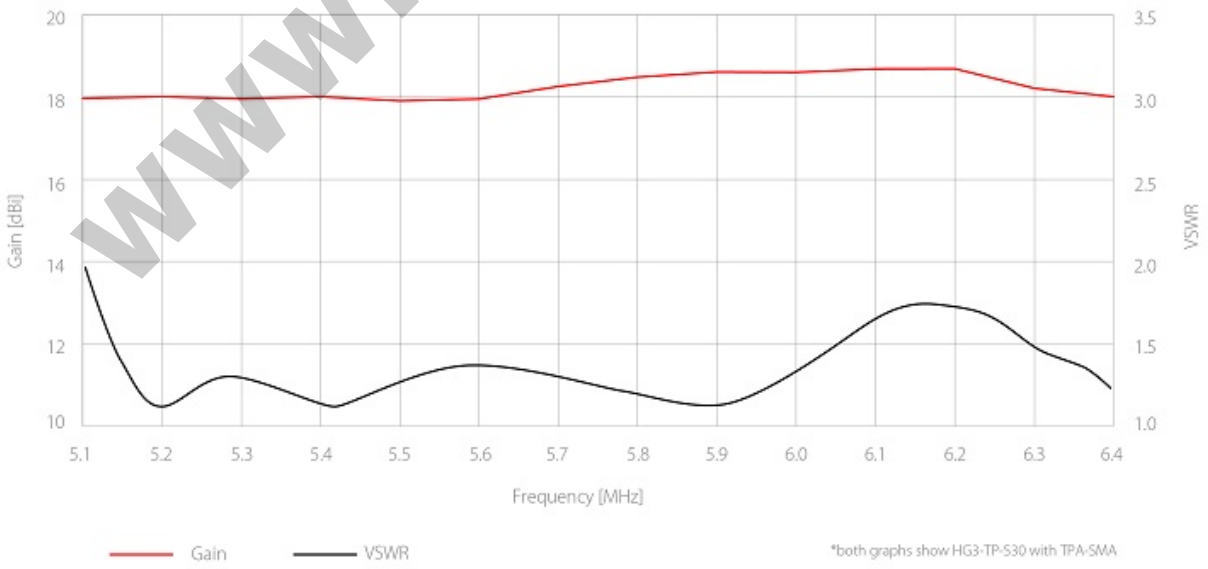

www.citraweb.com

Minimized Loss

RP-SMA connectors are placed directly on waveguide, avoiding use of inner coaxial cables and minimizing loss to necessary minimum.

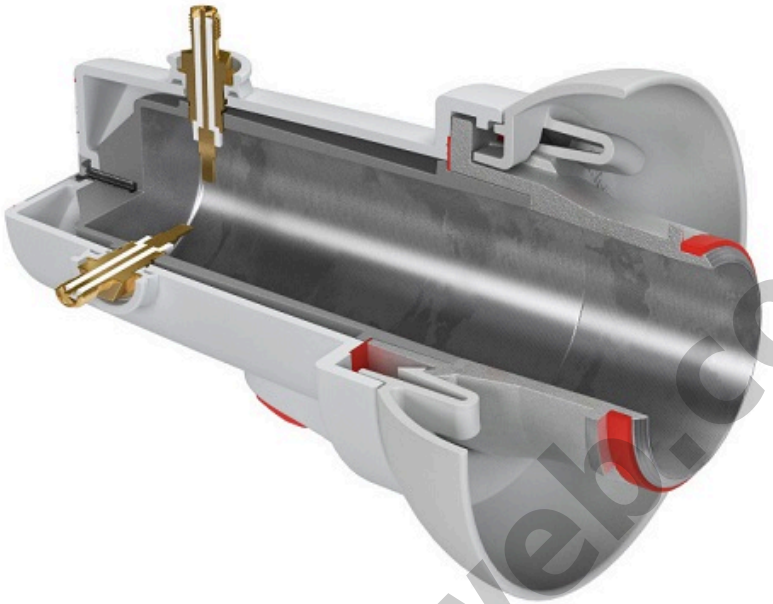

www.citraweb.com

Antenna Connection	TwistPort - Quick Locking Waveguide Port
Radio Connection	2x RP-SMA female
Materials	Insert - Aluminium Alloy
	Adaptor - UV stabilized and weather resistant ABS plastic
Flame Rating	UL 94 HB
Temperature	-40°C to +60°C (-40°F to +140°F)
Wind Survival	160 km/h
Weight	0.21 kg / 0.46 lbs – single unit
	0.28 kg / 0.61 lbs – single unit incl. package
	29.0 kg / 63.9 lbs – carton (100 units)
Single Unit	Retail Box: 155 × 100 × 97 mm
Frequency Range	5180 - 6400 MHz
Polarization	Dual Linear H + V

VSWR Max	1.8
Impedance	50 Ohm
Compatible	any TwistPort™ Antenna

www.citraweb.com

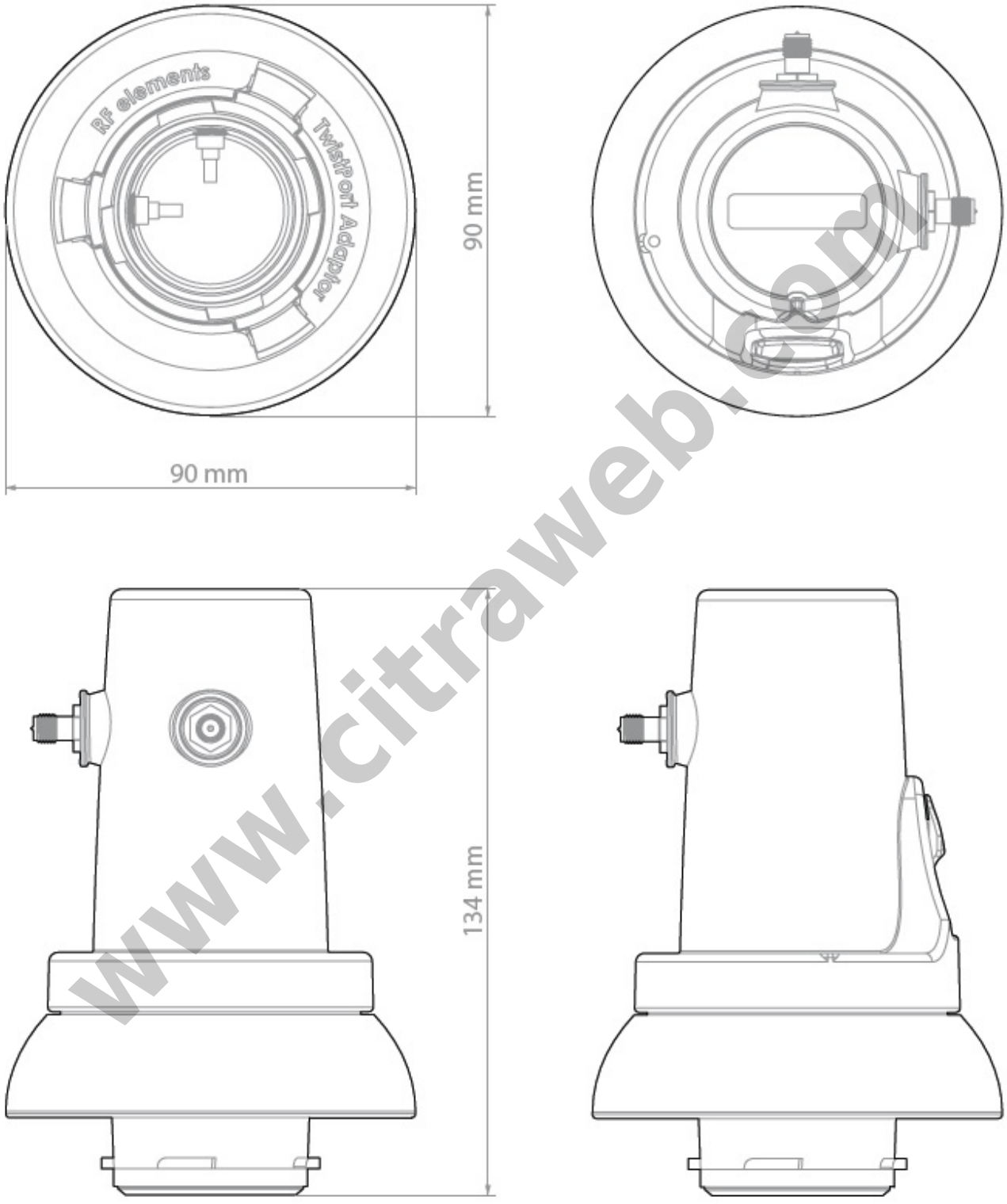

www.citraweb.com

Download Datasheet

Download UserGuide

www.citraweb.com

www.citraweb.com

** Harga, spesifikasi, dan ketersediaan bisa berubah dan tidak mengikat*

URL : https://www.citraweb.com/produk/884/

Informasi lebih lanjut, pemesanan dan pembelian, hubungi: 0274-554444 atau email sales@citraweb.com