RUTC41

4G EDGE ROUTER

Industrial & automation

Energy & utilities

Smart city

Retail

4G CAT 4

Enable smarter edge computing over 4G

ENHANCED PROCESSING

Dual-core CPU, 1 GB RAM, and 8 GB flash memory

DOCKER SUPPORT

Run Docker containers directly on the router to deploy custom solutions

WI-FI 6

Dual-band multi-user MIMO for superior wireless performance

Copyright © 2026, UAB TELTONIKA NETWORKS.
Specifications and information provided in this document are subject to change by UAB TELTONIKA NETWORKS without prior notice.

Mobile	
Mobile module	4G LTE Cat 4 up to 150 DL/50 UL Mbps; 3G up to 21 DL/ 5.76 UL Mbps; 2G up to 236.8 DL/236.8 UL Mbps
eSIM	Consumer type eSIM, profile download and removal operations, up to 7 eSIM profiles; does not include data plans
3GPP Release	Release 9
SIM switch	2 SIM cards and 1 eSIM, auto-switch cases: weak signal, data limit, SMS limit, roaming, no network, network denied, data connection fail, SIM idle protection
Status	Signal strength (RSSI), SINR, RSRP, RSRQ, EC/IO, RSCP, Bytes sent/received, connected band, IMSI, ICCID, SIM provider, operator, network type, cell ID, LAC, TAC, ARFCN, UARFCN, EARFCN
SMS	SMS status, SMS configuration, EMAIL to SMS, SMS to EMAIL, SMS to HTTP, SMS to SMS, scheduled SMS, SMS autoreply, SMPP
USSD	Supports sending and reading Unstructured Supplementary Service Data messages
Block/Allow list	Operator block/allow list (by country or separate operators)
Band management	Band lock, Used band status display
SIM idle protection service	Provides the possibility to configure the router to periodically switch to the unused SIM card and establish a data connection in order to prevent the SIM card from being blocked
SIM PIN code management	SIM PIN code management enables setting, changing, or disabling the SIM card's PIN
APN	Auto APN
Bridge	Direct connection (bridge) between mobile ISP and device on LAN
Passthrough	Router assigns its mobile WAN IP address to another device on LAN
Framed routing	Framed routing: support an IP network behind 5G UE

Site Manager	
Supported modes	Manager
Functionalities	Centralized management of TAP access points and Teltonika's managed switches — including device pairing and grouping, FOTA updates, device status monitoring, automatic reboot scheduling with ping/wget health checks, wireless SSID configuration, and VLAN assignment across the site.

Copyright © 2026, UAB TELTONIKA NETWORKS.
Specifications and information provided in this document are subject to change by UAB TELTONIKA NETWORKS without prior notice.

Wireless	
Wireless mode	802.11b/g/n/ac/ax (Wi-Fi 6) with data transmission rates up to 2402Mbps on 5GHz, 576Mbps on 2.4GHz (Dual Band, MU-MIMO)
Wi-Fi security	WPA2-Enterprise: PEAP, WPA2-PSK, WPA-EAP, WPA-PSK, WPA3-SAE, WPA3-EAP, OWE; AES-CCMP, TKIP, Auto-cipher modes, client separation, EAP-TLS with PKCS#12 certificates, disable auto-reconnect, 802.11w Protected Management Frames (PMF)
SSID/ESSID	SSID stealth mode and access control based on MAC address
WiFi users	Up to 500 simultaneous connections
Wireless Connectivity Features	Wireless mesh (802.11s), fast roaming (802.11r), BSS transition management (802.11v), radio resource measurement (802.11k)
Wireless MAC filter	Allowlist, blocklist
Wireless QR code generator	Once scanned, a user will automatically enter your network without needing to input login information
TravelMate	Forward Wi-Fi hotspot landing page to a subsequent connected device

Ethernet	
WAN	1 x WAN port 10/100/1000 Mbps, compliance with IEEE 802.3, IEEE 802.3u, 802.3az standards, supports auto MDI/MDIX crossover
LAN	4 x LAN ports, 10/100/1000 Mbps, compliance with IEEE 802.3, IEEE 802.3u, 802.3az standards, supports auto MDI/MDIX crossover

Copyright © 2026, UAB TELTONIKA NETWORKS.
Specifications and information provided in this document are subject to change by UAB TELTONIKA NETWORKS without prior notice.

Network	
Routing	Static routing, Dynamic routing (BGP, OSPF v2, RIP v1/v2, EIGRP, NHRP), Policy based routing
Network protocols	TCP, UDP, IPv4, IPv6, ICMP, NTP, DNS, HTTP, HTTPS, SFTP, FTP, SMTP, SSL/TLS, ARP, VRRP, PPP, PPPoE, UPNP, SSH, DHCP, Telnet, SMPP, SNMP, MQTT, Wake On Lan (WOL), VXLAN
VoIP passthrough support	H.323 and SIP-alg protocol NAT helpers, allowing proper routing of VoIP packets
Connection monitoring	Ping Reboot, Wget Reboot, Periodic Reboot, LCP and ICMP for link inspection
Firewall	Port forward, traffic rules, custom rules, TTL target customisation
Firewall status page	View all your Firewall statistics, rules, and rule counters
Port management	View device ports, enable and disable each of them, turn auto-configuration on or off, change their transmission speed, and so on
Network topology	Visual representation of your network, showing which devices are connected to which other devices
DHCP	Static and dynamic IP allocation, DHCP relay, DHCP server configuration, status, static leases: MAC with wildcards
QoS / Smart Queue Management (SQM)	Traffic priority queuing by source/destination, service, protocol or port, WMM, 802.11e
DDNS	Supported >77 service providers, others can be configured manually
DNS over HTTPS	DNS over HTTPS proxy enables secure DNS resolution by routing DNS queries over HTTPS
Network backup	Wi-Fi WAN, Mobile, VRRP, Wired options, each of which can be used as an automatic Failover
Load balancing	Balance Internet traffic over multiple WAN connections
Hotspot	Captive portal (hotspot), internal/external Radius server, Radius MAC authentication, SMS authorisation, SSO authentication, internal/external landing page, walled garden, user scripts, URL parameters, user groups, individual user or group limitations, user management, 9 default customisable themes and optionality to upload and download customised hotspot themes
Hotspot 2.0	Hotspot 2.0 is a Wi-Fi standard that enables seamless, secure, and automatic connection to trusted wireless networks
SSHFS	Possibility to mount remote file system via SSH protocol
VRF support	Initial virtual routing and forwarding (VRF) support
Traffic Management	Real-time monitoring, wireless signal charts, traffic usage history
IGMP Proxy	Possibility to relay multicast membership messages between hosts and a router, enabling multicast traffic to flow across different network segments
Port Mirroring	Mirroring network traffic on Ethernet ports for monitoring and analysis

Copyright © 2026, UAB TELTONIKA NETWORKS.
Specifications and information provided in this document are subject to change by UAB TELTONIKA NETWORKS without prior notice.

Security	
802.1x	Port-based network access control client and server support
Authentication	Pre-shared key, digital certificates, X.509 certificates, TACACS+, Internal & External RADIUS users authentication, IP & login attempts block, time-based login blocking, built-in random password generator
Firewall	Preconfigured firewall rules can be enabled via WebUI, unlimited firewall configuration via CLI, DMZ, NAT, NAT-T, NAT64
Attack prevention	DDOS prevention (SYN flood protection, SSH attack prevention, HTTP/HTTPS attack prevention), port scan prevention (SYN-FIN, SYN-RST, X-mas, NULL flags, FIN scan attacks)
VLAN	Port and tag-based VLAN separation
Mobile quota control	Mobile data limit, customizable period, start time, warning limit, phone number
WEB filter	Block list for blocking out unwanted websites, allow list for specifying allowed sites only
Access control	Flexible access control of SSH, Web interface, CLI and Telnet
Certificate Manager	Certificate creation tool allows to create CA, server, client, let's encrypt, SCEP certificates

Copyright © 2026, UAB TELTONIKA NETWORKS.
Specifications and information provided in this document are subject to change by UAB TELTONIKA NETWORKS without prior notice.

VPN	
OpenVPN	Multiple clients and a server can run simultaneously, 27 encryption methods
OpenVPN Encryption	DES-CBC 64, RC2-CBC 128, DES-EDE-CBC 128, DES-EDE3-CBC 192, DESX-CBC 192, BF-CBC 128, RC2-40-CBC 40, CAST5-CBC 128, RC2-64-CBC 64, AES-128-CBC 128, AES-128-CFB 128, AES-128-CFB1 128, AES-128-CFB8 128, AES-128-OFB 128, AES-128-GCM 128, AES-192-CFB 192, AES-192-CFB1 192, AES-192-CFB8 192, AES-192-OFB 192, AES-192-CBC 192, AES-192-GCM 192, AES-256-GCM 256, AES-256-CFB 256, AES-256-CFB1 256, AES-256-CFB8 256, AES-256-OFB 256, AES-256-CBC 256
IPsec	XFRM, IKEv1, IKEv2, with 14 encryption methods for IPsec (3DES, DES, AES128, AES192, AES256, AES128GCM8, AES192GCM8, AES256GCM8, AES128GCM12, AES192GCM12, AES256GCM12, AES128GCM16, AES192GCM16, AES256GCM16)
GRE	GRE tunnel, GRE tunnel over IPsec support
PPTP, L2TP	Client/Server instances can run simultaneously, L2TPv3, L2TP over IPsec support
Stunnel	Proxy designed to add TLS encryption functionality to existing clients and servers without any changes in the program's code
DMVPN	Method of building scalable IPsec VPNs, Phase 2 and Phase 3 and Dual Hub support
SSTP	SSTP client instance support
ZeroTier	ZeroTier VPN client support
WireGuard	WireGuard VPN client and server support
Tinc	Tinc offers encryption, authentication and compression in it's tunnels. Client and server support.
Tailscale	Tailscale offers speed, stability, and simplicity over traditional VPNs. Encrypted point-to-point connections using the open source WireGuard protocol
Netbird	Open-source VPN management platform built on top of WireGuard® making it easy to create secure private networks for your organization or home
EoIP	Ethernet over IP (EoIP) tunnelling is a protocol based on GRE RFC 1701 that creates an Ethernet tunnel between two routers on top of an IP connection
OpenConnect	Cross-platform multi-protocol SSL VPN client which supports a number of VPN protocols

BacNET	
Supported modes	Router
Supported connection types	IP, RTU (USB)
Configuration options	Support for multiple BACnet/IP interfaces, Network number assignment, Preconfigured BDT entries for BBMD (BACnet Broadcast Management Device)

OPC UA	
Supported modes	Client, Server
Supported connection types	TCP

Copyright © 2026, UAB TELTONIKA NETWORKS.
Specifications and information provided in this document are subject to change by UAB TELTONIKA NETWORKS without prior notice.

MQTT Gateway	
Modbus MQTT Gateway	Allows sending commands and receiving data from MODBUS Server through MQTT broker

MODBUS	
Supported modes	Server, Client
Supported connection types	TCP, USB
Custom registers	MODBUS TCP custom register block requests, which read/write to a file inside the router, and can be used to extend MODBUS TCP Client functionality
Supported data formats	8-bit: INT, UINT; 16-bit: INT, UINT (MSB or LSB first); 32-bit: float, INT, UINT (ABCD (big-endian), DCBA (little-endian), CDAB, BADC), HEX, ASCII

Data to Server	
Protocol	HTTP(S), MQTT, Azure MQTT
Data to server	Extract parameters from multiple sources and different protocols, and send them all to a single server; Custom LUA scripting, allowing scripts to utilize the router's Data to server feature

DNP3	
Supported modes	Station, Outstation
Supported connection	TCP

DLMS/COSEM	
DLMS Support	DLMS - standard protocol for utility meter data exchange
Supported modes	Client
Supported connection types	TCP, USB

API	
Teltonika Networks Web API (beta) support	Expand your device's possibilities by using a set of configurable API endpoints to retrieve or change data. For more information, please refer to this documentation: https://developers.teltonika-networks.com

Copyright © 2026, UAB TELTONIKA NETWORKS.
Specifications and information provided in this document are subject to change by UAB TELTONIKA NETWORKS without prior notice.

Monitoring & Management	
WEB UI	HTTP/HTTPS, status, configuration, FW update, CLI, troubleshoot, multiple event log servers, firmware update availability notifications, event log, system log, kernel log, Internet status
FOTA	Firmware update from server, automatic notification
SSH	SSH (v1, v2)
SMS	SMS status, SMS configuration
Call	Reboot, Status, Mobile data on/off, Output on/off, answer/hang-up with a timer, Wi-Fi on/off
Email	Receive email message status alerts of various services
TR-069	OpenACS, EasyCwmp, ACSLite, tGem, LibreACS, GenieACS, FreeACS, LibCWMP, Friendly tech, AVSystem
MQTT	MQTT Broker, MQTT publisher
SNMP	SNMP (v1, v2, v3), SNMP Trap, Brute force protection
JSON-RPC	Management API over HTTP/HTTPS
RMS	Teltonika Remote Management System (RMS)

IoT Platforms	
ThingWorx	Allows monitoring of: WAN Type, WAN IP, Mobile Operator Name, Mobile Signal Strength, Mobile Network Type
Cumulocity - Cloud of Things	Allows monitoring of: Device Model, Revision and Serial Number, WAN Type and IP, Mobile Cell ID, ICCID, IMEI, Connection Type, Operator, Signal Strength. Has reboot and firmware upgrade actions
Azure IoT Hub	Can be configured with Data to Server to send all the available parameters to the cloud. Has Direct method support which allows to execute RutOS API calls on the IoT Hub. Also has Plug and Play integration with Device Provisioning Service that allows zero-touch device provisioning to IoT Hubs
AWS IoT Core	Utility to interact with the AWS cloud platform. Jobs Support: Call the device's API using AWS Jobs functionality

DOCKER	
Docker Support	Supports running isolated applications and services using Docker containers, enabling custom software environments and microservices deployment directly on the device

System Characteristics	
CPU	Mediatek, Dual-core, 1.3 GHz, ARM Cortex A53
RAM	1 GB, DDR4
FLASH storage	16 MB serial NOR flash, 8 GB eMMC Flash

Copyright © 2026, UAB TELTONIKA NETWORKS.
Specifications and information provided in this document are subject to change by UAB TELTONIKA NETWORKS without prior notice.

Firmware/Configuration	
WEB UI	Update FW from file, check FW on server, configuration profiles, configuration backup
FOTA	Update FW
RMS	Update FW/configuration for multiple devices at once
Keep settings	Update FW without losing current configuration
Factory settings reset	A full factory reset restores all system settings, including the IP address, PIN, and user data to the default manufacturer's configuration

FIRMWARE CUSTOMISATION	
Operating system	RutOS (OpenWrt based Linux OS)
Supported languages	Busybox shell, Lua, C, C++
Development tools	SDK package with build environment provided
GPL customization	You can create your own custom, branded firmware and web page application by changing colours, logos, and other elements in our firmware to fit your or your clients' needs
Package Manager	The Package Manager is a service used to install additional software on the device

USB	
Data rate	USB 2.0
Applications	Samba share, USB-to-serial
External devices	Possibility to connect external HDD, flash drive, additional modem, printer, USB-serial adapter
Storage formats	FAT, FAT32, exFAT, NTFS (read-only), ext2, ext3, ext4

Input/Output	
Input	1 x Digital Input, 0 - 6 V detected as logic low, 8 - 50 V detected as logic high
Output	1 x Digital Output, Open collector output, max output 50 V, 300 mA
Events	Email, RMS, SMS
I/O juggler	Allows to set certain I/O conditions to initiate event

Power	
Connector	4-pin industrial DC power socket
Input voltage range	9 - 50 VDC, reverse polarity protection, voltage surge/transient protection
PoE (passive)	Possibility to power up through LAN1 port, not compatible with IEEE802.3af, 802.3at and 802.3bt standards, Mode B, 9 - 50 VDC
Power consumption	Idle: < 5.5 W, Max: < 13.5 W

Copyright © 2026, UAB TELTONIKA NETWORKS.
Specifications and information provided in this document are subject to change by UAB TELTONIKA NETWORKS without prior notice.

Physical Interfaces	
Ethernet	5 x RJ45 ports, 10/100/1000 Mbps
I/O's	1 x Digital Input, 1 x Digital Output on 4-pin power connector
Status LEDs	4 x WAN type, 3 x Mobile connection type, 3 x Mobile connection strength, 10 x LAN status, 1 x Power, 2 x 2.4G and 5G Wi-Fi
SIM	2 x SIM slots (Mini SIM - 2FF), 1.8 V/3 V, external SIM holders
Power	1 x 4-pin power connector
Antennas	2 x SMA for Mobile, 3 x RP-SMA for Wi-Fi
USB	1 x USB A port for external devices
Reset	Reboot/User default reset/Factory reset button
Other	1 x Grounding screw

Physical Specification	
Casing material	Anodised aluminium housing and panels
Dimensions (W x H x D)	130.4 x 42.6 x 104 mm
Weight	480 g
Mounting options	DIN rail, wall mount, flat surface (all require additional kit)

Operating Environment	
Operating temperature	-40 °C to 75 °C
Operating humidity	10% to 90% non-condensing
Ingress Protection Rating	IP30

Copyright © 2026, UAB TELTONIKA NETWORKS.
Specifications and information provided in this document are subject to change by UAB TELTONIKA NETWORKS without prior notice.

Certification

EMEA	RUTC41 CE RUTC41 UKCA RUTC41 RoHS RUTC41 REACH
APAC	RUTC41 RCM
MISCELLANEOUS	RUTC41 CB Scheme
SAFETY & ENVIROINMENTAL	RUTC41 WEEE

Copyright © 2026, UAB TELTONIKA NETWORKS.
Specifications and information provided in this document are subject to change by UAB TELTONIKA NETWORKS without prior notice.

Hardware

FRONT VIEW

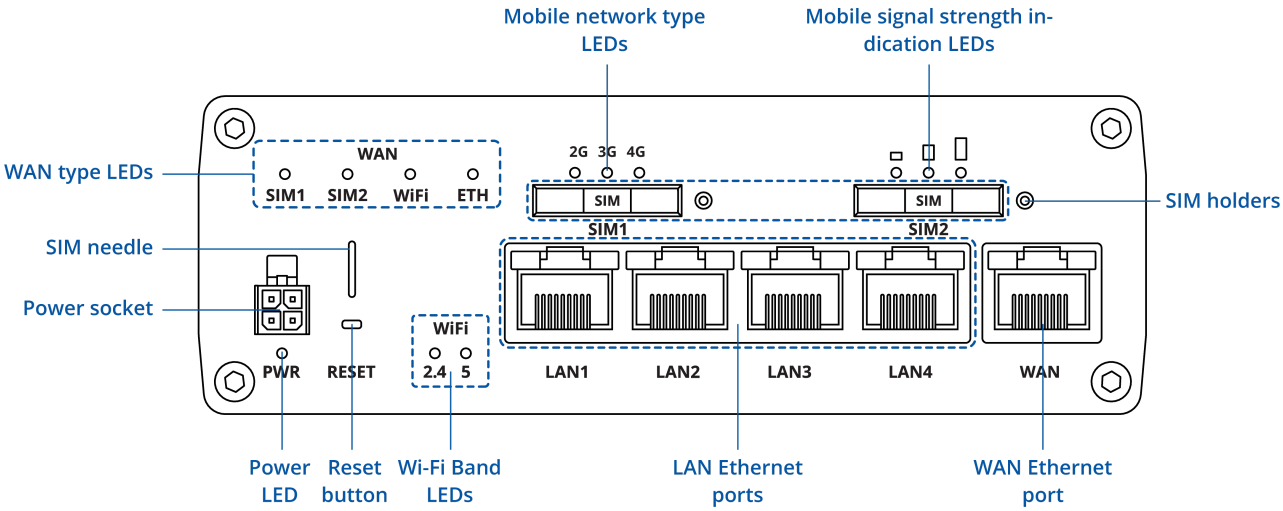

BACK VIEW

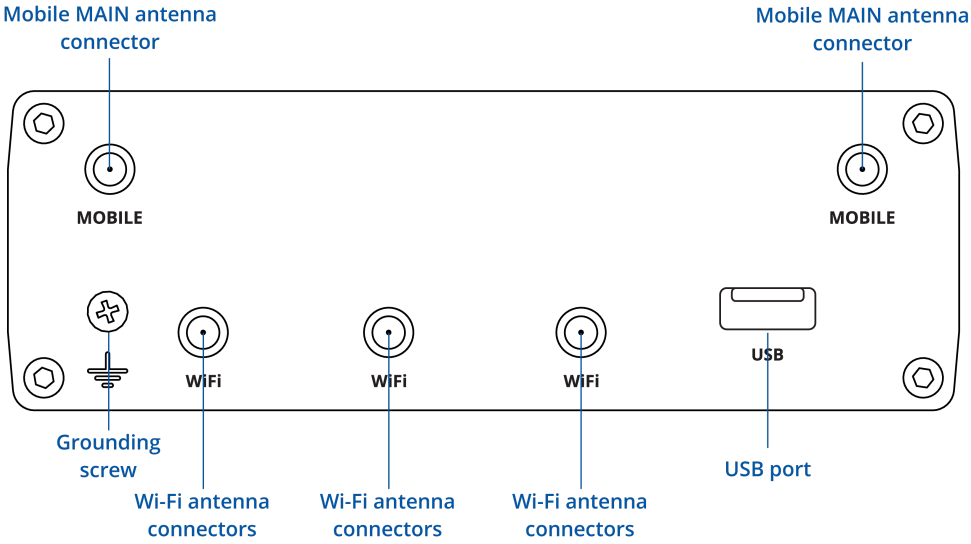

POWER CONNECTOR

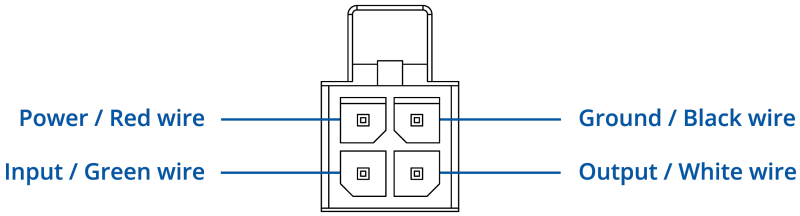

Copyright © 2026, UAB TELTONIKA NETWORKS.
Specifications and information provided in this document are subject to change by UAB TELTONIKA NETWORKS without prior notice.

Ordering

Standard package*

QUICK START GUIDE

RUTC41

EU POWER SUPPLY, 24 W

2 X MOBILE SMA ANTENNAS

3 X WI-FI DUAL-BAND SMA ANTENAS

ETHERNET CABLE 1.5 M

SIM ADAPTER KIT

*Standard package contents may differ based on standard order codes.

For more information on all available packaging options – please contact us directly.

Copyright © 2026, UAB TELTONIKA NETWORKS.
Specifications and information provided in this document are subject to change by UAB TELTONIKA NETWORKS without prior notice.

Classification codes

HS Code: 851762
HTS: 8517.62.00

For more information on all available packaging options – please contact us directly.

Available versions

Hardware version	Supported frequencies	Standard order code / Package Contains
RUTC41 0***** EMEA[1], Thailand, Australia, New Zealand	**4G (LTE-FDD)**: B1, B3, B5, B7, B8, B20, B28 **4G (LTE-TDD)**: B38, B40, B41 **3G**: B1, B8 **2G**: B3, B8	RUTC41000000 / Standard package with EU PSU RUTC41000200 / Standard package with UK PSU RUTC4100AA00 / Standard package with AU PSU RUTC41000300 / Mass packing RUTC4100AC00 / Standard package with power cable (4-way screw terminal)

1 - Regional availability - excluding Russia, Belarus & Iran
The price and lead-times for region (operator) specific versions may vary. For more information please contact us.

RUTC41 spatial measurements

Available versions	
Device housing (W x H x D)	130.4 x 42.6 x 104 mm
Box (W x H x D):	355 x 60 x 175 mm

Copyright © 2026, UAB TELTONIKA NETWORKS.
Specifications and information provided in this document are subject to change by UAB TELTONIKA NETWORKS without prior notice.

TOP VIEW

The figure below depicts the measurements of device and its components as seen from the top:

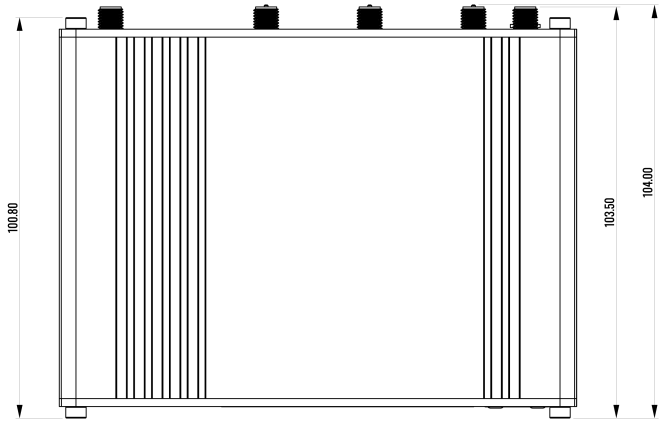

LEFT VIEW

The figure below depicts the measurements of device and its components as seen from the left:

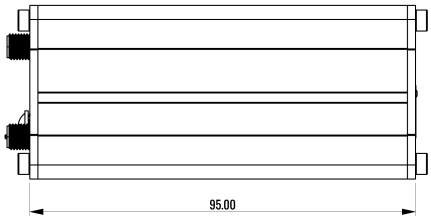

FRONT VIEW

The figure below depicts the measurements of device and its components as seen from the front panel side:

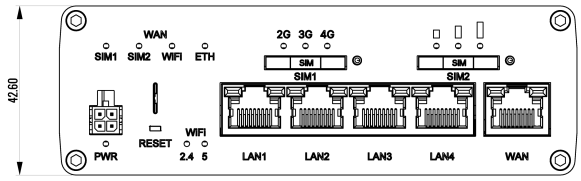

REAR VIEW

The figure below depicts the measurements of device and its components as seen from the back panel side:

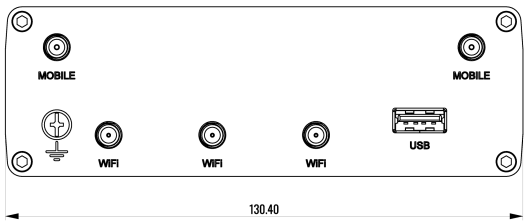

Copyright © 2026, UAB TELTONIKA NETWORKS.
Specifications and information provided in this document are subject to change by UAB TELTONIKA NETWORKS without prior notice.

MOUNTING SPACE REQUIREMENTS

The figure below depicts an approximation of the device's dimensions when cables and antennas are attached:

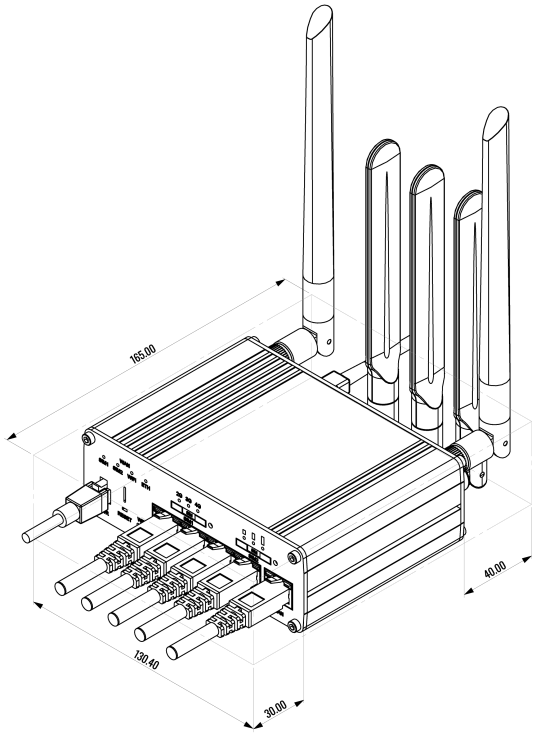

DIN RAIL

The scheme below depicts protrusion measurements of an attached DIN Rail:

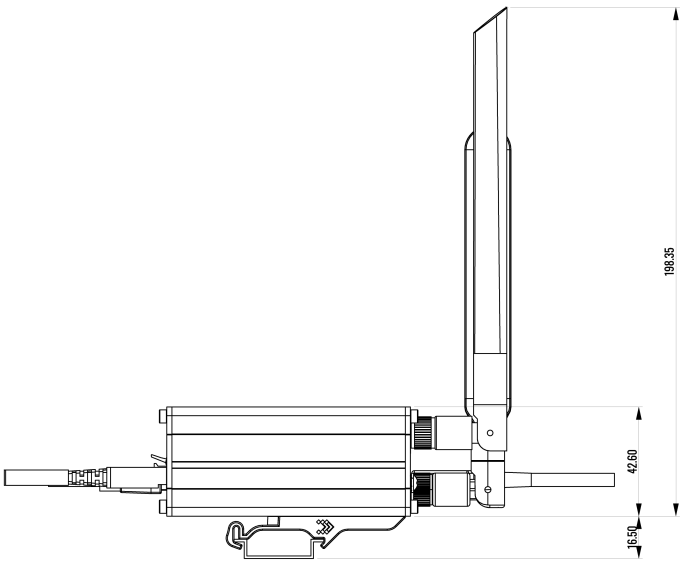

Copyright © 2026, UAB TELTONIKA NETWORKS.
Specifications and information provided in this document are subject to change by UAB TELTONIKA NETWORKS without prior notice.